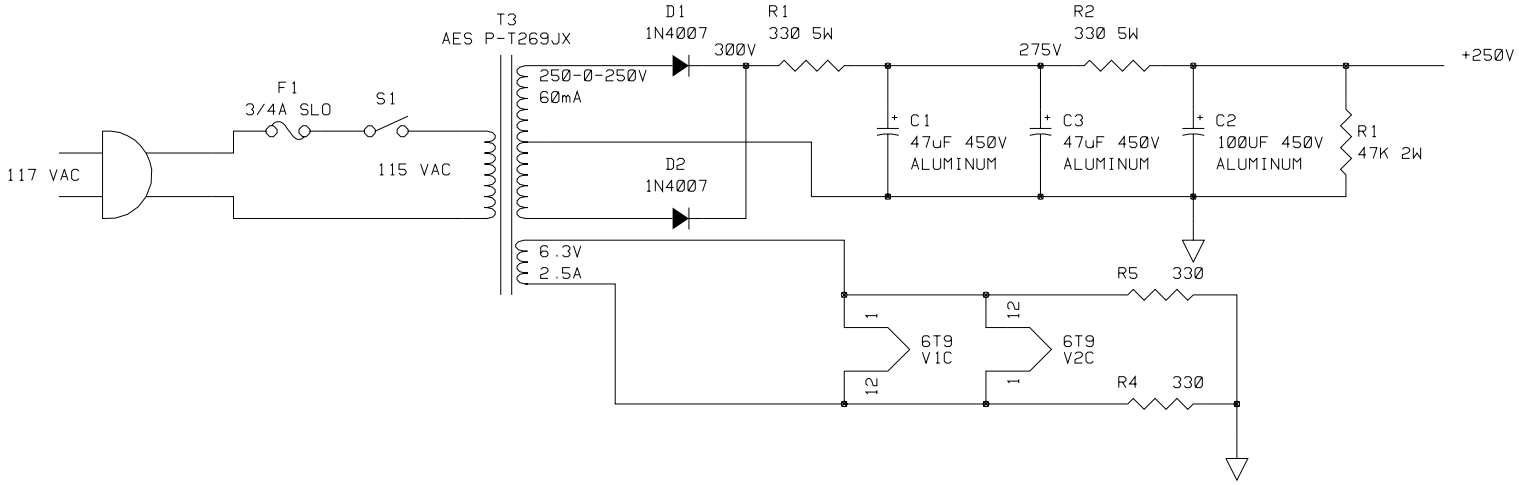

6T9 AMP
POWER SUPPLY

COPYRIGHT (C) 2004 BY SPARE TIME GIZMOS
ALL RIGHTS RESERVED. REFER TO LICENSE FILE FOR DETAILS.

SIZE C

15:55:00 15-Jul-04 | POWER | SHEET 1 OF 1