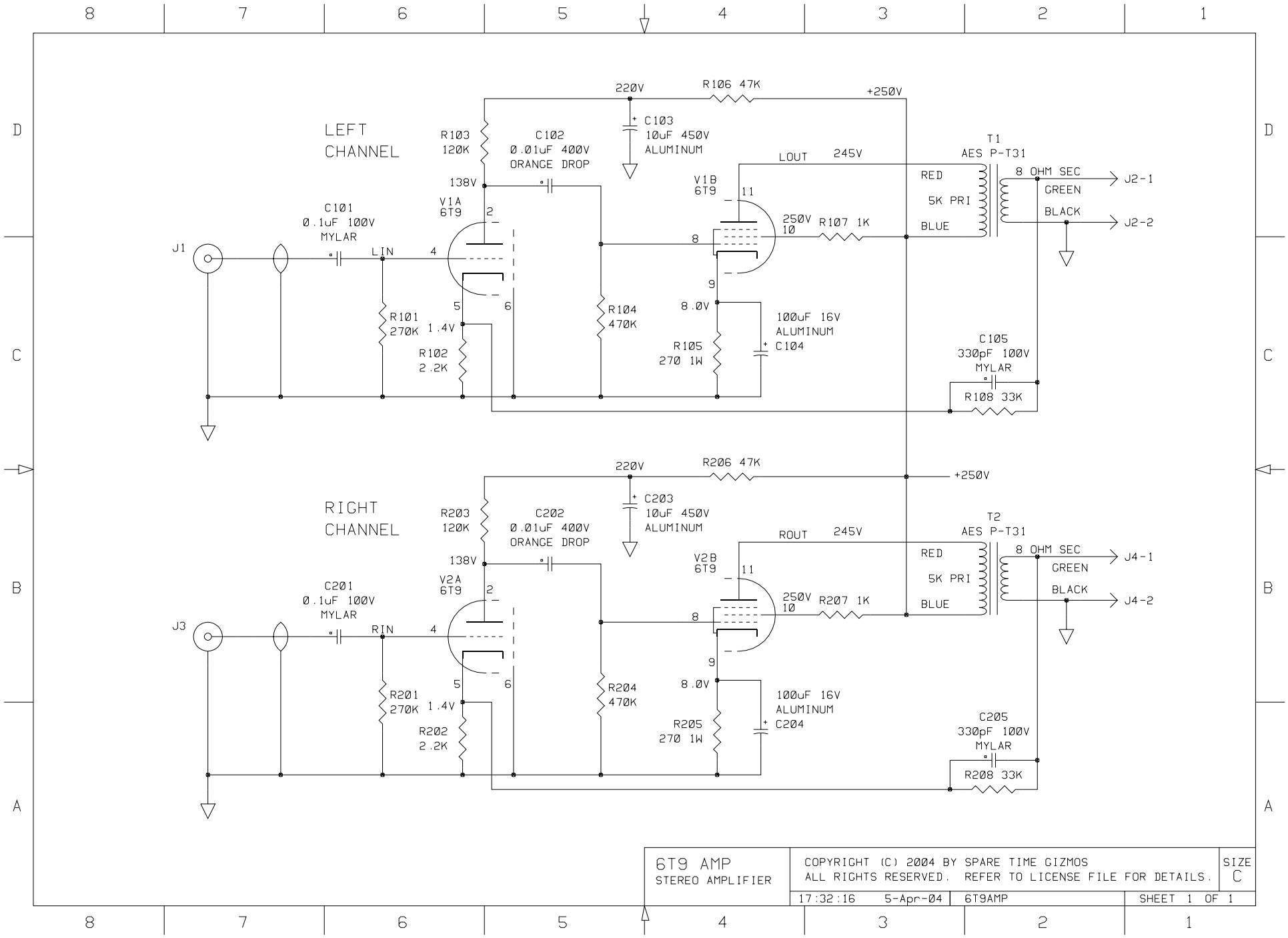

6T9 AMP STEREO AMPLIFIER	COPYRIGHT (C) 2004 BY SPARE TIME GIZMOS ALL RIGHTS RESERVED. REFER TO LICENSE FILE FOR DETAILS.	SIZE C
	17:32:16 5-Apr-04 6T9AMP	SHEET 1 OF 1